WasteMaid® FOOD WASTE DISPOSER PRO 759 1/2 HORSEPOWER

Easy and Fast to Install
Speed Master Mounting System provides fast and economical installation.
Corrosion Proof
Lifetime warranty against failure due to corrosion.
Permanent Magnet Motor
Maximum torque instantly with the power to cut through potential jams.
Removable Splash Guard
Removable splash guard, ideal for easy cleaning and replacement.
Attached Power Cord
Ready to plug in.

BIO SHIELD® ***Antimicrobial*** for **ODOR PROTECTION!** Disposers are treated with an antimicrobial agent molded inside providing protection against odor causing bacteria growth.

TORQUE MASTER® ***Balanced Grinding System***: A combination of computer designed and balanced components working in unison to provide superior torque grind speed and long system life.

HORSEPOWER	1/2 HP
MOTOR SPEED RPM	2600 RPM
VOLTAGE	120v
AMPS	4.5
CYCLES	60
BEARINGS	Permanently Lubricated, Sleeve Type
MOTOR TYPE	Permanent Magnet
SPLASH GUARD	Removable
GRIND RING	Stainless Steel
SWIVEL IMPELLERS	Stamped Stainless Steel
BALANCED TURNTABLE	Stainless Steel
BALANCED ARMATURE SHAFT	Yes
HOPPER	Corrosion Proof
DRAIN HOUSING	Corrosion Proof
APPLIANCE PROTECTOR	Manual Reset
SINK FLANGE CAP	Stainless Steel
MOUNT ASSEMBLY	Speed Master-Threaded
SOUND SHELL	Full
ATTACHED POWER CORD	Yes
DISHWASHER CONNECTION	Yes
UNIT WEIGHT	10.2 lb
INDIVIDUAL SHIPPING WEIGHT	12 lb
LIFETIME CORROSION GUARANTEE	Yes
WARRANTY	6 Years

Dimensions

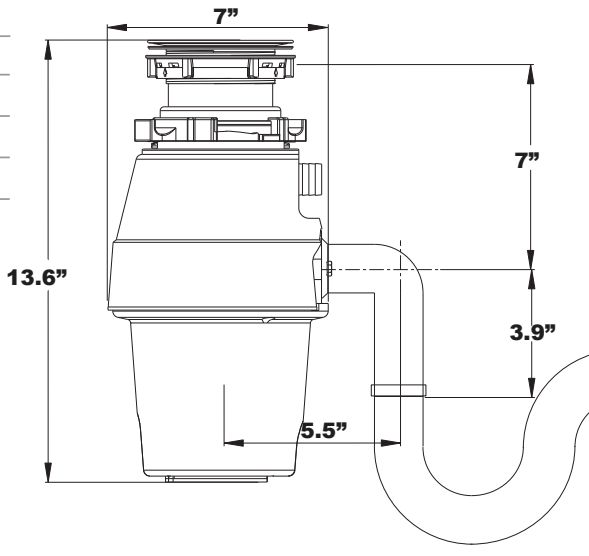

Joneca Company, LLC
4332 E. La Palma Avenue, Anaheim, California 92807
Telephone: 714.993.5997 Fax: 714.993.2126 Toll Free 1-888-8Joneca
Website: www.Joneca.com Email: ContactUs@Joneca.com

©2017 Joneca Company, LLC, All Rights Reserved.